Town of Avon Residential Property Card

Property at 00073 HARRIS ROAD | Prop ID 2570073 | Printed 09-Dec-2025 11:03 AM | Design and Layout (C) Right/Angles

Administrative Information

Owner name: COLE LEROY & HEATHER
Second name:
Address: 73 HARRIS ROAD
City/state: AVON CT Zip: 06001

Location Information

Map: 030 Clerk map:
Lot: 2570073 Neigh.: Zone: R40 Vol: 794 Page: 1088

Assessments

Assmt category	Qty	Amount
Resident Land	.92	94,500
Resident Dwellng	1.00	169,480
Resident Excess	.32	1,680

Exemptions

Exempt	Cat	Amount
APA	Veteran	265,660

Last sale

Sale date: 03-Jul-2024
Sale price: 451,000
Sale valid:

Values

Mkt value :
Cost value: 379,514

Summary

Total assessments	265,660
Total exemptions	265,660
Net assessment	

Utilities

Water	Connecticut
Sewer	Septic
Gas	None

Sales ratios

Cost/sale : .8415
Mkt/sale :
Assmt/sale: .5890

Land Information

Type	Use	Acres/SqFt	Rate	Total	Infl Fact	Value	70% Value
PRIM	11	.920	135,000	135,000		135,000	94,500
Primary Site		40,075					
RES	12	.320	7,500	2,400		2,400	1,680
Residual		13,939					
		1.240 acres		Total land value		137,400	96,180

Residential Dwelling Information

Subject	Code	Description
Style	01	Ranch
Exterior Walls	01	Clapboards
Roof Material	01	Asphalt Shingles
Roof Type	01	Gable
Foundation	01	Poured Concrete
Interior Walls	01	Plaster
Floors	01	Hardwood
Heating System	02	Forced Hot Air
Fuel	01	Oil
Attic	99	None
Grade	33	C+
Garage	22	Attached 2 car
Area Over Gar.	99	None
Basement	01	Full
Bsmt Fin Qual	03	Rec Room W/ Air
Air Condition	01	Central Air
Interior Cond	05	Good
Exterior Cond	05	Good

Condominium

Story Height 1.0

Total Rooms	6	Garage cars	2
Bedrooms	3	Unfinished area	
Family Rooms	1	Dormer linear f	
Full Baths	2	Masonry trim sf	
Half Baths		Finish bsmt sz	
Addtn'l fixtures		Rec Room Size	400
Whirlpools		Living area	1,862
Saunas		# Living Units	1
M/F stacks			
W/B stacks	1		
W/B openings	1		

Actual Year Built: 1950

Building Valuation Summary

						Area	
Dwelling	Frame	1 story w/bsmt				956	172,300
Basement	Full						
Heating	Yes	A/C	Yes				4,960
Plumbing	2 F/B	H/B	Add'l fix.	Wh/p	Saunas		5,000
Attic	None	Attic size:					
Additions							145,850
Other Features		WB Stks	RR				16,774
Sub-Total							344,884
Grade	C+	Factor 1.0800					372,475
CDU		C&D Factor 1.00					372,475
Depreciation		35 %					242,109
		Computed cost value @ 70%					169,476

Building additions

Category		Type		Area	Value
G	Garages	FR	Attached frame LE 65	576	25,187
L	Living Area	FRFF	Frame first floor	220	25,186
L	Living Area	FRFF	Frame first floor	286	32,742
L	Living Area	AIR	Air conditioning	286	869
P	Porches, Patios, Decks	FOFF	Frame open first flo	77	4,691
P	Porches, Patios, Decks	CPAT	Concrete patio	117	997
P	Porches, Patios, Decks	BPAT	Brick/flagstone pati	364	8,301
L	Living Area	FRFF	Frame first floor	400	45,792
L	Living Area	AIR	Air conditioning	400	1,216
L	Living Area	AIR	Air conditioning	286	869
			Total additions		145,850

Outbuilding Information

Description	Wid	Len	Area	Rate	Year	Cnd	RCN	Depr	Value

Value at 70% Value at 100%
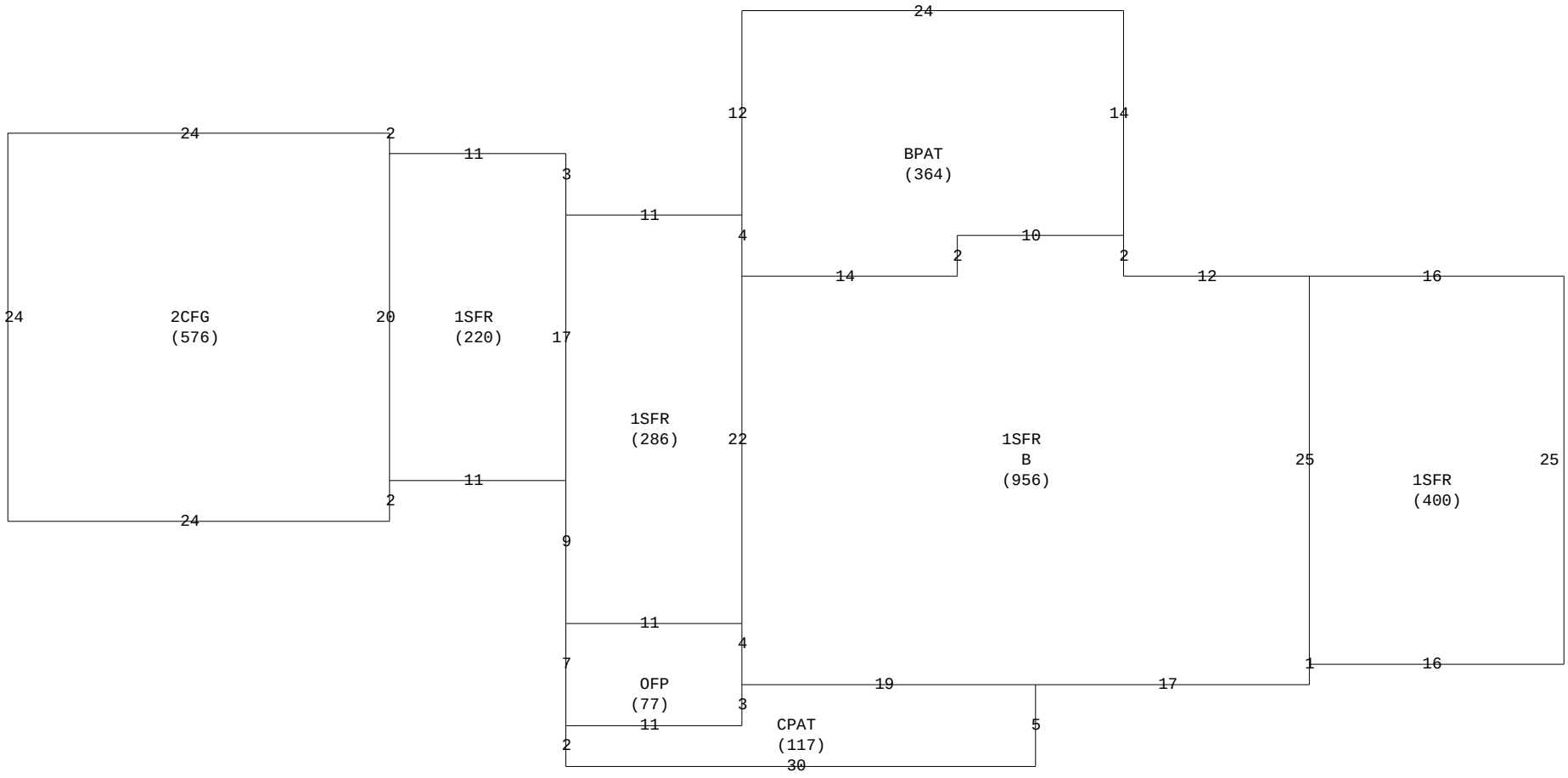
Property at 00073 HARRIS ROAD | Prop ID 2570073 Card 01 | Scale: 1" = 10.27 feet